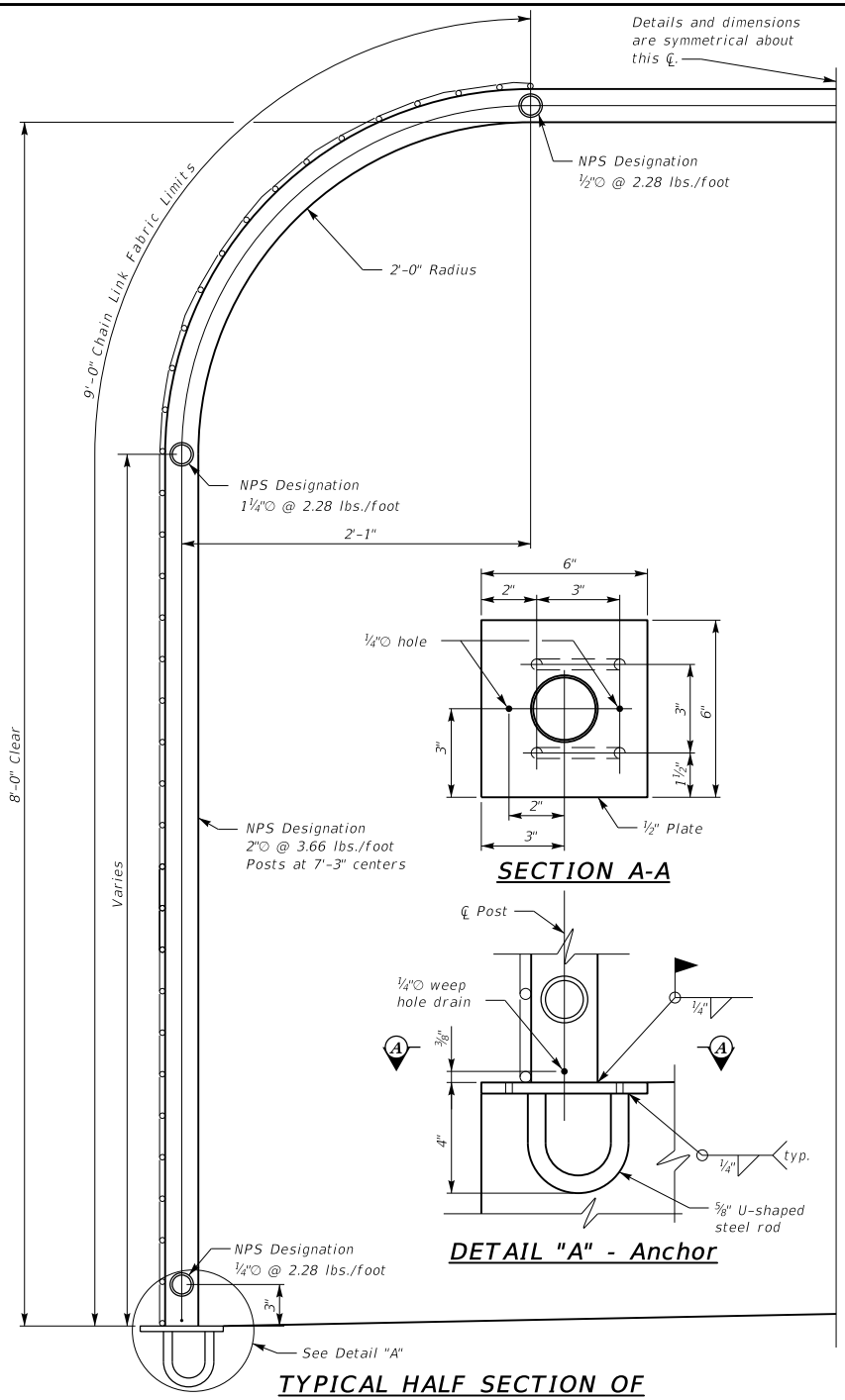

TYPICAL HALF SECTION OF PEDESTRIAN CAGE FOR OVERPASSES

SECTION A-A

DETAIL "A" - Anchor

GENERAL NOTES

SPECIFICATIONS: Unless otherwise noted, vinyl coat all materials used in the fabrication of the pedestrian cage, stair and ramp fence and handrail in accordance with AASHTO Standard Specification M 181, current edition.

POST: Ensure fence posts are NPS Designation 2"⌀ @ 3.66 lbs/ft., Grade 1.

RAILS AND HANDRAIL: Ensure rails are NPS Designation 1¼"⌀ @ 2.28 lbs/ft., Grade 1.

CHAIN LINK FABRIC: Use Polyvinyl Chloride (PVC) coated steel fence Type IV for this project with the color of coating to be Dark Green with the size of fence being in accordance with Section 817 of the Specifications. Tie the fabric to the posts and rails at 2 ft. centers (maximum).

ANCHOR PLATES: Place plates prior to pouring the concrete. Drilling of concrete to place anchor plates is not an option. Ensure anchor plates, handrail plates, and U-shaped rods conform to AASHTO M183 or SAE specification M 1020 and galvanized in accordance with ASTM A153. Apply a vinyl finish coat on all exposed surfaces of the anchor plates after the posts are in place.

DAMAGE COATING: After the installation of the chain link fabric, clean any damaged areas of any of the fence components by washing with mineral spirit solvent sufficient to remove any contaminants. After cleaning, apply a vinyl washing primer to the surfaces with dry film thickness of 0.3 mil to 0.5 mil before the final vinyl finish coat is applied.

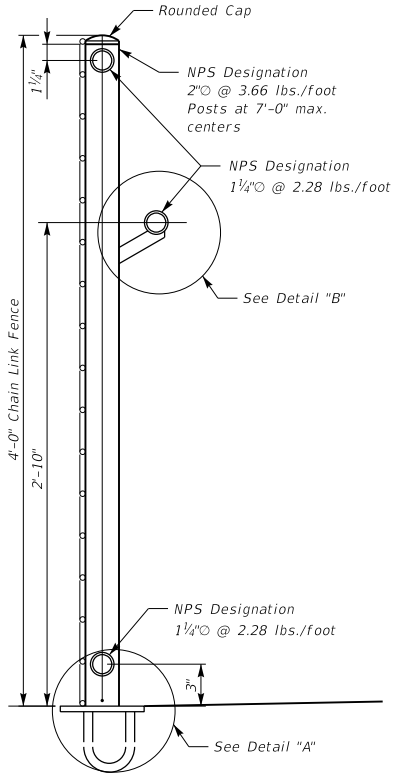

TYPICAL SECTION THROUGH RAMP OR STAIRS

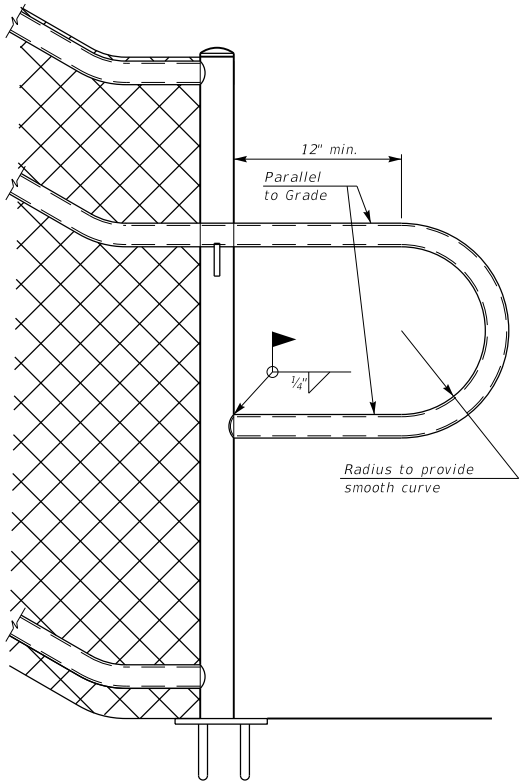

TYPICAL ENDPOST RAIL TREATMENT

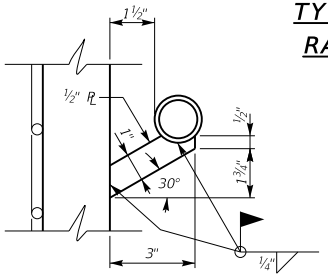

DETAIL "B" - Handrail

KENTUCKY
DEPARTMENT OF HIGHWAYS

CHAINLINK FENCE

STANDARD DRAWING NO. BGX-025

SUBMITTED _____ DIRECTOR DIVISION OF STRUCTURAL DESIGN — DATE 02-26-20

APPROVED _____ STATE HIGHWAY ENGINEER — DATE 02-26-20